EED 101 INTRODUCTION TO ELECTRICAL ENGINEERING

SPRING 2018 **INSTRUCTOR: DR G NAVEEN BABU**

PROBLEM SET 9

4.9 Assuming an ideal op-amp, determine the voltage gain of the circuit in Fig. P4.9.

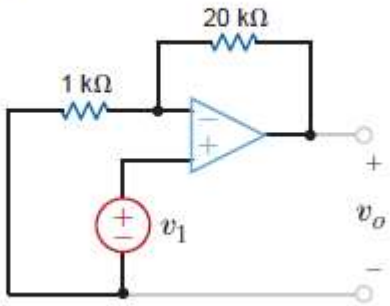

Figure P4.9

4.11 Assuming an ideal op-amp in Fig. P4.11, determine the value of R_X that will produce a voltage gain of 26.

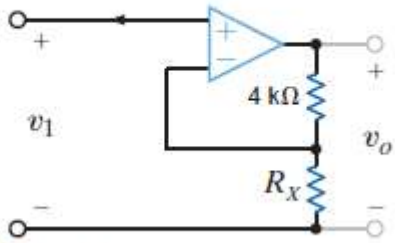

Figure P4.11

4.13 Assuming an ideal op-amp in Fig. P4.13, determine the output voltage V_o.

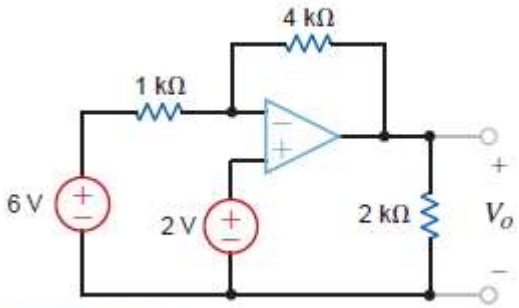

Figure P4.13

4.19 The op-amp in the amplifier in Fig. P4.19 operates with ±15 V supplies and can output no more than 200 mA. What is the maximum gain allowable for the amplifier if the maximum value of V_S is 1 V?

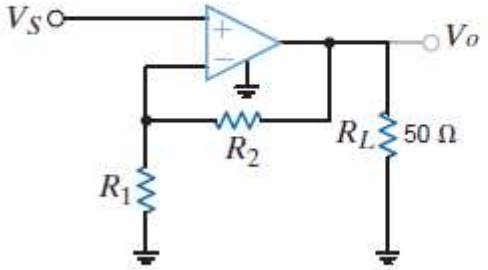

Figure P4.19

4.23 The network in Fig. P4.23 is a current-to-voltage converter or transconductance amplifier. Find v_o/i_S for this network.

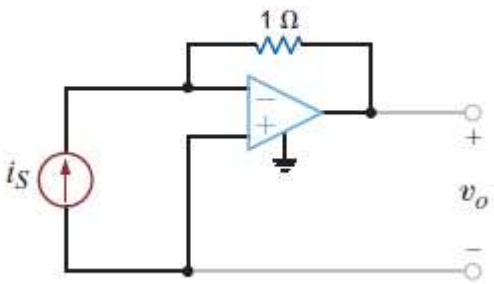

Figure P4.23

4.42 Find v_o in the circuit in Fig. P4.42.

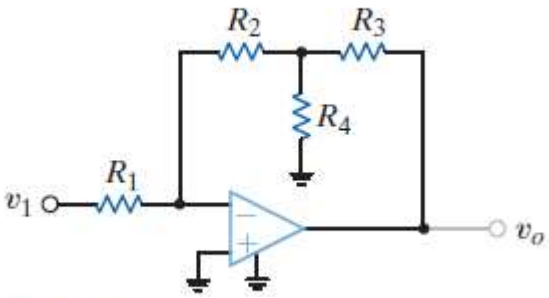

Figure P4.42

4.43 Find the output voltage, v_o, in the circuit in Fig. P4.43.

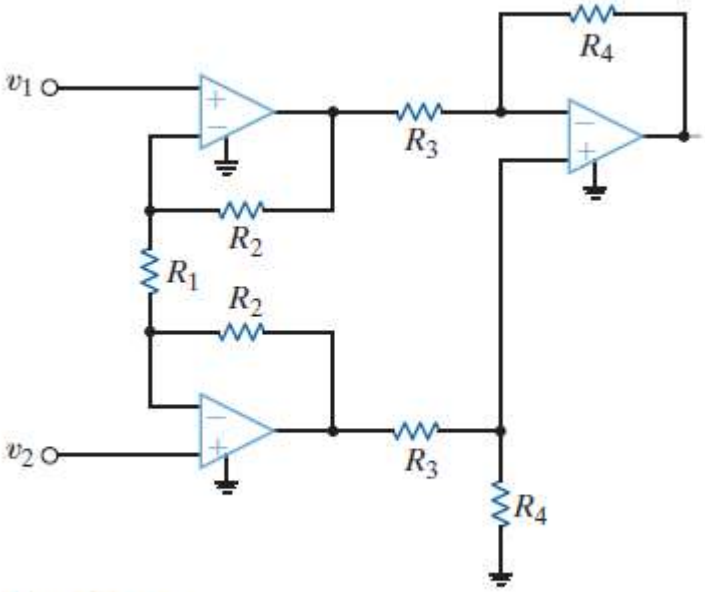

Figure P4.43

4.44 The electronic ammeter in Example 4.9 has been modified and is shown in Fig. P4.44. The selector switch allows the user to change the range of the meter. Using values for R_1 and R_2 from Example 4.9, find the values of R_A and R_B that will yield a 10-V output when the current being measured is 100 mA and 10 mA, respectively.

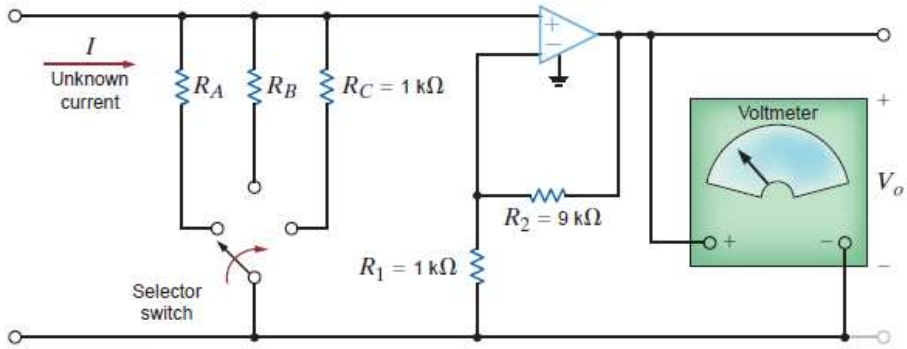

Figure P4.44

4.47 Design a two-stage op-amp network that has a gain of −50,000 while drawing no current into its input terminal. Use no resistors smaller than 1 kΩ.

4.53 Show that the circuit in Fig. P4.53 can produce the output

$$V_o = K_1V_1 - K_2V_2$$

only for $0 \le K_1 \le K_2 + 1$.

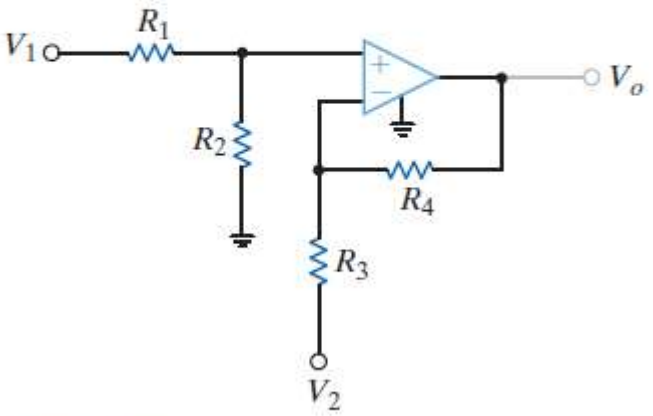

Figure P4.53

4PFE-2 Determine the output voltage V_o of the summing op-amp circuit shown in Fig. 4PFE-2.

a. 6 V b. 18 V

c. 9 V d. 10 V

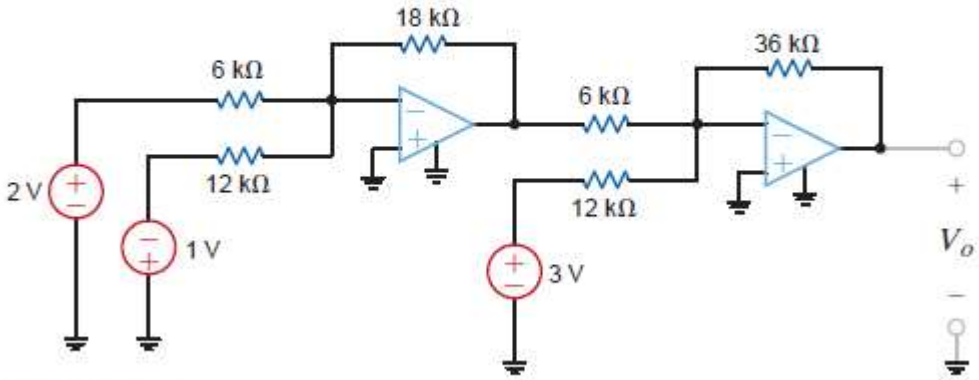

Figure 4PFE-2

4PFE-5 What is the voltage V_o in the circuit in Fig. 4PFE-5?

a. 3 V

b. 6 V

c. 8 V

d. 5 V

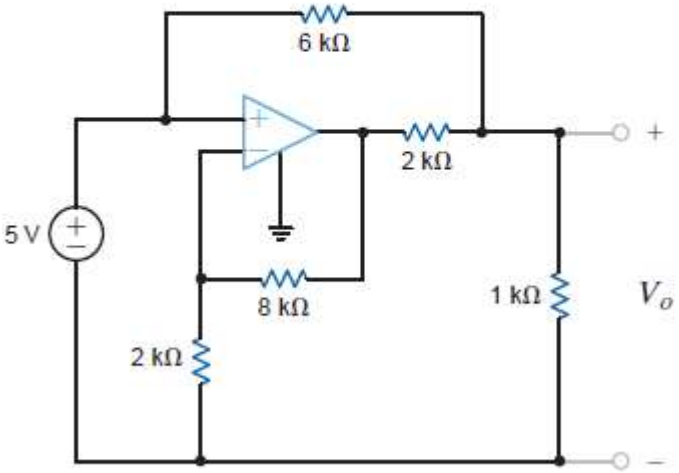

Figure 4PFE-5